Available online at www.sciencedirect.com

SciVerse ScienceDirect

Energy Procedia 23 (2012) 370 – 380

Energy Procedia

6th Trondheim CCS Conference (TCCS-6)

A multivariable approach for control system optimization of IGCC with CCS in DECARBit project

A. Bardi[a], G. Pannocchia[b]

[a]ENEL Ingegneria e Innovazione, Pisa 56120, Italy*
[b] Chemical Engineering Department - University of Pisa, Pisa 56126, Italy

Abstract

IGCCs with CCS differ from existing IGCCs mainly because of steam integration between gasification process and combined cycle, and because of selective capture of CO_2. A dynamic simulator of IGCCs with CCS considered in DECARBit project was developed by using a in house code, ALTERLEGO, and a commercial code ASPEN HYSYS®. Simulators were used to assess flexibility of the process design and effectiveness of the control system during load changes. Starting from steady state results at nominal load, the simulator development has been implemented to assure a stable transient behavior during load reduction. As a result of this study, the flue-gas temperature and IP pressure should be regulated at fixed setpoint. Moreover, critical behavior of CO shift temperature controllers,can be mitigated by means of suitable setpoint coordination.

Keywords: IGCC, optimization, dynamic simulation control system

* Corresponding author. Tel.: +39 (050) 6185583; fax: +39 (050) 6185592.
E-mail address: alessio.bardi@enel.com.

 doi:10.1016/j.egypro.2012.06.046

1. Introduction

The DECARBit (acronym for DECarbonize it) project, granted by 7th European Framework Programme, is focused on enabling zero-emission pre-combustion power plants by 2020 with a CO_2 capture cost of less than 15€/ton and the highest feasible capture rate. DECARBit is focusing on high-potential, cost-efficient advanced capture techniques in coal gasification process to provide hydrogen-rich fuel gases for use in gas turbines. One of these efforts is to investigate the availability of Integrated Gasification and Combined Cycles with Carbon Capture and Storage (IGCC with CCS) by a simulation tool.

Real time dynamic simulators aim at providing the plant designers with additional troubleshooting and trending information about plant operability at part load and to identify possible issues of the control system caused by the process layout. Furthermore, a detailed dynamic simulation model can be used to synthesize an optimized control system and to optimize the procedure during startup and shutdown operations.

Starting from a conceptual design and data sheets of main components, the development of a dynamic simulator of the DECARBit IGCC plant (base case configuration) was carried out. The objective was to investigate transient behaviors from nominal load to such off-design states in order to asses criticalities over the integration with new process technologies.This paper describes the main achievements of this research activity.

Nomenclature

AGR	Acid Gas Removal
ASU	Air Separation Unit
BFD	Block Flow Diagram
CC	Combined Cycle
CCS	Carbon Capture Storage
CDS	Component Data Sheet
Cv	Valve flow coefficient
GTCC	Gas Turbine Combined Cycle
GT	Gas Turbine
HRSG	Heat Recovery Steam Generator
HP	High Pressure
HMFB	Heat & Mass flow balance
IGCC	Integrated Gasification Combined Cycle
IP	Intermediate Pressure
LP	Low Pressure
MAD	Model Assignment Data

MOD	Model Oriented Diagram
MPC	Model Predictive Controller
NG	Natural Gas
RGA	Relative Gain Array
ST	Steam Turbine
SP	(Controller) Set-point
PV	(Controller) Process Variable
OP	(Controller) Output
WGSR	Water Gas Shift Reactor
WHB	Waste Heat Boiler

2. Methodology: basic simulation

2.1. DECARBit IGCC plant

The first activity in the DECARBit project was the selection of the base case cycle with CO_2 capture as a starting point to evaluate the benefit of integration of new technologies (see Fig.1) The entrained flow gasifier from Shell with syngas recycle was chosen for the base case with a pressure at 44 bar and the gasification temperature at 1550 °C. The air separation unit (ASU) is a cryogenic type operating at 10 bar. The air inlet to the ASU is 50% integrated with the gas turbine – i.e. 50% of the air inlet to the ASU comes from the gas turbine. Oxygen is available at 2.6 bar and 20 °C from the ASU. The IGCC test case with CO_2 capture includes shift reactors for converting carbon monoxide to carbon dioxide and an AGR unit including a CO_2 capture section. The shift reactors are used to concentrate the carbon chemical species in the syngas in the form of CO_2 that can be later removed from the gas by physical absorption and to produce extra H_2. The shift reaction of CO from the raw gas is accomplished, using a "sour shift" or "dirty shift" technology, in two catalytic beds operating at 300 °C and 250 °C, respectively. The shift conversion heat is used to raise HP, IP and LP steam, and preheat streams. The combined cycle (CC) was designed with an F class type gas turbine (GT), whereas the heat recovery steam generation (HRSG) and steam turbine (ST) cycle is a three pressure cycle with reheat. The acid gas removal (AGR) system involves a two stage Selexol process for H_2S and CO_2 removal. The former is sent to the Claus plant, whereas the CO_2 is compressed to 110 bar and sent through a pipeline to the storage sites. The Selexol solvent is regenerated by flashing at three different pressures (5, 2.3 and 1.05 bar) and recycled back to absorption stage. For CO_2 capture, the Selexol solvent must be refrigerated to 5°C, whereas the Selexol solvent is regenerated from the H_2S rich solvent in a stripper column.

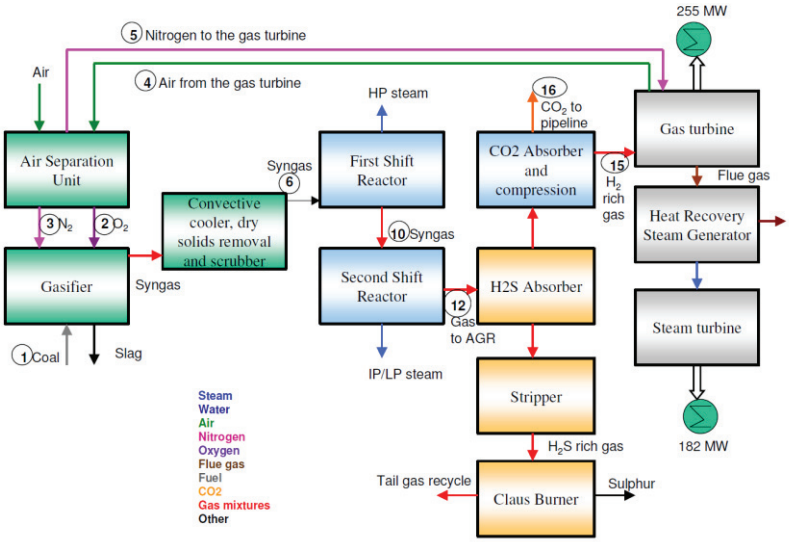

Fig. 1: BFD of IGCC base case configuration

2.2. Developing the dynamic simulator with ALTERLEGO

The ENEL in-house platform ALTERLEGO was used for the simulator development thanks to the general approach oriented towards conventional power plants. The use of a modules library of consistent mathematical models of elementary process or components based on the fundamental principles of physics and chemistry (conservation of mass, momentum and energy) allows the user to develop the simulator by splitting the plant in simulation tasks. The advantages of the first principles approach is that it is not necessary to know the component operating curve to calibrate the model, moreover the models can work in different operating conditions including off-design conditions. The run time environment solves the equation system by means of a "Newton-Raphson" method. Starting from results of steady state calculations, a workflow of simulator's development was implemented (see Fig. 2).

First of all, heat and mass flow balances (HMFB) at nominal load were analyzed in order to check the consistency of the steady state model available from the DECARBit project. Afterwards the block flow diagram (BFD, see Fig. 3) of the simulator was analyzed, hence building the backbone of the developing steps (*task topology* and the *model configuration*). These steps were developed by-means of *model oriented diagram* and *model assignment data* (MOD, MAD), which are spreadsheets elaborated from Component Data Sheets (CDS) of the main components.

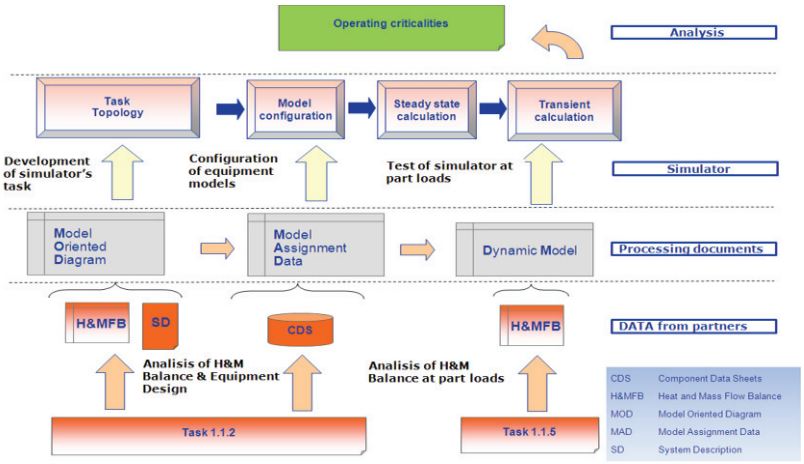

Fig. 2: Workflow applied to simulator's development

The main features of the process simulator are:

- detailed model of the combined cycle inclusive of GT and HRSG (task GTCC);
- model of syngas treatment train (task TREAT) inclusive of particulate removal, venturi scrubber, WGSRs and the heat exchanger network between ASU, CC and AGR units;
- model of AGR unit with selective H_2S and CO_2 removal (task SELE);
- plant basic control system to assure a stable transient behavior during load reduction;

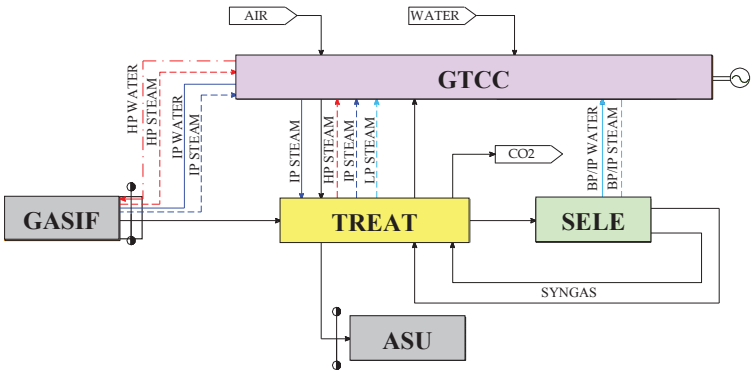

Fig. 3: BFD of the simulator

According to the steady state model a number of units (namely, ASU, Claus plant and the gasifier) were implemented as black boxes. A special remark has to be done for the heat exchanger network that is made of 16 heat exchangers. The first is placed between the scrubber and the 1st WGSR, two are between the WGSRs, the rest of those are between 2nd WGSR and AGR unit. The main goals of the control strategy are:

- To control inherent instabilities of the process (such as tank and column levels);
- To apply a regulation loop to coordinate the combined cycle with syngas behaviors;
- To assure a load gradient (8MWe/min) in transient behavior, similar to IGCC plant with no CCS ;

The control loops implemented are:

- Temperature control at WGSRs inlet;
- Composition control at 1st WGSR;
- Composition and level control at Selexol unit;
- Pressure and level control of drums and condenser;
- Temperature control at reactor inlet;
- Temperature control of outlet GT flue gas;
- Air pressure and flow rate controls at ASU inlet;
- GT control system.

2.3. ALTERLEGO simulations

A detailed study has been carried out by means of dynamic simulator, and a comparison with the part loads steady state off-design studies has been carried out. Load variations from 100% GT load to 60% GT load (approximately 72% gasifier load) and vice versa can be obtained quickly (from 10 to 15 minutes) without compromising safe operation of the overall process. The load gradient is not affected by CC since typical value applied to these plants is 16 MWe/min. The limiting factor is the pressure gradient upstream the CC that can lead to trip the gasifier. Since this pressure gradient is not dependent on CCS unit it has been assumed a similar load gradient of IGCC with no CCS (Puertollano IGCC) [5]. During shutdown and start-up, the CC, ASU and syngas process have to be decoupled according to driving criteria.

The first decoupling event is the switchback one, which starts when natural gas operation takes over from syngas operation. This event happens at a specific part load depending on syngas LHV and air temperature, and it is affected by such boundaries conditions [1]. Dynamic simulations were performed with descending load down near to switchback load and back to nominal load. In a first approach, it was decided to keep constant pressures of HRSG at their nominal value. Moreover, the ramp of gasifier load was set to 8 MWe/min corresponding to a gasifier load gradient of 3%/min. During load rise, the reverse operations were performed. In some cases the performed operations are ramp signals to (flow rate) controllers, while in other cases they are ramp signals to direct dynamic specifications (flow rates and pressure drops). Temperature, level and pressure controllers were kept at constant set-point. Controllers have been tuned properly taking into account different gradients during descending load. In particular, some useful considerations about tuning can be made [2]:

- Flow-rate controllers appear tuned adequately, but in order follow a tracking set-point, retuning of some loops could be necessary;
- Pressure controllers of HRSG are nicely stable, but a sliding pressure behavior must be checked according to Puertollano IGCC procedures;
- Level controllers do not appear critical, and their conservative tuning allows for safe excursions from their set-point;

- Temperature controllers may be improved, especially those controlling the inlet temperature of CO-shift reactors. A preliminary tuning study has improved the performance to a limited extent, but therefore further analysis is necessary;
- The control valves design were adequately sized in order to avoid saturation during the load variations.

As an example, Fig. 4 reports the simulated behavior of the GT flue gas flow-rate during a load change from nominal load to 75% GT load [3].

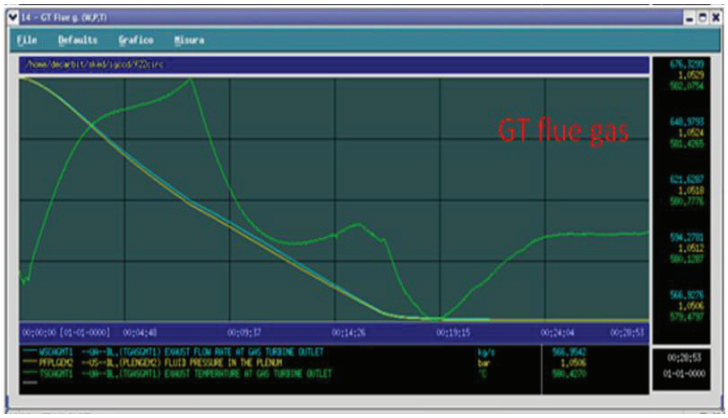

Fig. 4: GT Flue gas behaviour between nominal load and switchover load

3. Methodology: control strategy optimization

3.1. Aspen HYSYS® simulations: objectives

In order to validate the ALTERLEGO simulator and to optimize the control system, a parallel simulation model has been developed using a commercial software, Aspen HYSYS®. Aspen HYSYS® offers a comprehensive thermodynamics foundation for accurate calculation of physical properties, transport properties, and phase behaviour for the oil & gas and refining industries becoming the standard in industry. Furthermore, Aspen HYSYS® offers a large degree of flexibility in terms of control system design and simulation, and hence it allows us to test and optimize different strategies. Such a model was intended to replicate, as accurately as possible, the operating conditions of the ALTERLEGO simulator. The specific activity performed has focused on the following aspects:

- Critical evaluation of the dynamic simulation model developed in Aspen HYSYS®, alignment with the DECARBit specifications, and identification of critical specifications;
- Detailed analysis and comparison of partial load operating conditions, with specific attention to the evaluation of suitable reduced pressure levels in HP and IP drums;
- Comparison of different load variation strategies to analyze the effect of ramp durations and pressure levels at reduced load;
- Identification of most critical sections of the process and detailed analysis of multivariable interactions and/or valve saturations. Definition of a simple, yet effective, multivariable setpoint coordination strategy to reduce such negative effects.

In particular, the partial load design studies in [4] assume that both HP drums and IP drums operate in sliding conditions, i.e., their pressure decreases, while LP drums operate at fixed pressure. On the other hand, the IGCC plant of Puertollano operates in sliding mode only for HP drums [5], because the IP

steam is used for several services. In this study, it was also found that operating in sliding mode for IP drums may prove detrimental in terms on dynamic performance due to the fact that IP steam is a feedstock to the first CO-shift reactor. If the IP steam pressure decreases below the nominal operating pressure of this reactor, several oscillation are experienced before the overall plant stabilizes, as discussed in the next section. Moreover, in Aspen HYSYS® model when the GT load is lowered, the flue gas temperature was still maintained at the reference value, whereas in [4,6] instead, the lower the GT load, the higher the flue gas temperature.

3.2. Aspen HYSYS® simulations: results

In order to define the most effective load descent and load rise procedures, several aspects must be taken into account. In particular, the ramp duration for flow rate and pressure controllers affects both stability and overall duration, and a compromise between these two opposite effects must be sought. As previously discussed, when reducing the plant load, IP tanks can be operated in sliding pressure mode or at fixed pressure. During these simulations, a large number of variables have been monitored, and indications of the most critical controllers and variables were obtained.

The main critical behavior has been observed passing through IP fixed to slide operation. Simulations at part loads have essentially confirmed the steady state calculations with two important differences:

- First, the turbine flue gas temperature is better operated at fixed temperature rather than at different temperature for reduced loads;
- Second, the IP drums are better operated at fixed. pressure, otherwise dynamic instabilities are experienced during load variations.

3.3. Multivariable analysis and control strategy optimization

The flue gas temperature controller works reasonably well, but it was noticed that when the IP drums are operated in sliding pressure mode, large oscillations are generated during load variations (see Fig. 5). The phenomenon has the consequence of generating instability of the H_2 rich syngas mass flow rate sent to the GT, consequently GT and the ST powers are overly oscillating. A closer investigation has shown that the source of these oscillating behaviors can be found in the WGSR's sections, where IP steam is used a primary reagent.

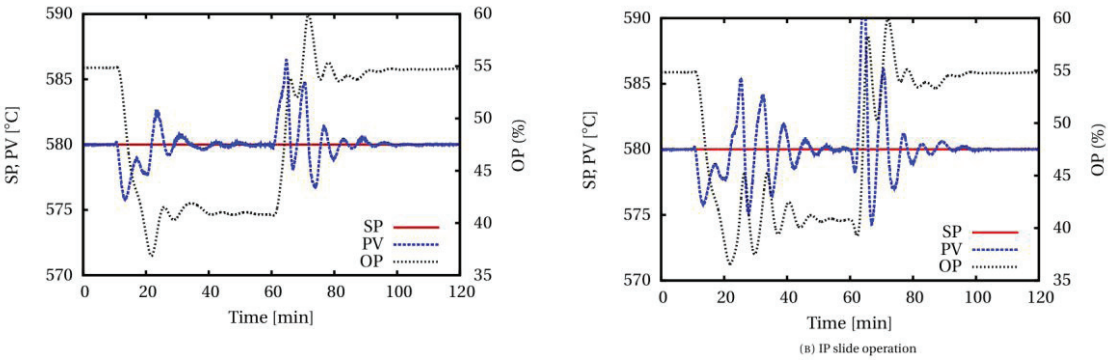

Fig. 5: Flue gas temperature controller IP fixed operation (left), IP slide operation (right).

The two temperature controllers of the CO-shift reactor inlets often saturate (even for long periods). In order to investigate about the sources of this behavior and to identify possible remedies, Relative Gain

Array (RGA) analysis [7] has been performed, but this multivariable measure reveals that (steady-state) interactions are almost zero (the RGA element of the current loop pairing is almost one). Hence, interactions among loops become evident only when constrained operation occurs, i.e., when one loop or the other one saturates permanently at reduced load. It must be noted that due to the particular heat exchanger and bypass network, an increase in Cv of the two control valves does not help much, and therefore this change was not implemented. In analogy with the behavior of a constrained Model Predictive Controller (MPC, see e.g. [8,9]), in order to avoid valve saturation, one or both setpoints

should be manipulated accordingly. Thus, in the procedures defined later on, the setpoint of the CO-shift reactor 2 inlet temperature controller is lowered during a load descent and rose again when the nominal load is restored.

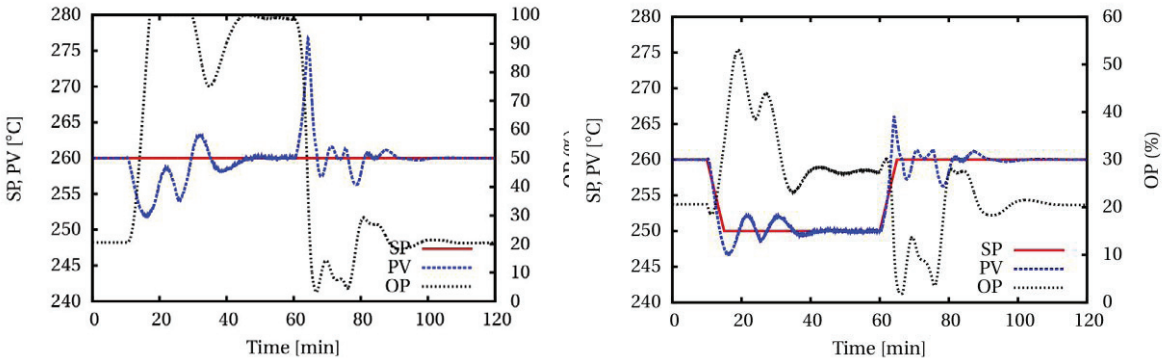

Fig. 6. CO shift reactor II temperature controller. Ramp duration 10 minutes (left). Optimized load variation procedure (right)

Pressure controllers of the two absorption columns need a considerable detuning to avoid inducing oscillations in H2-rich Syngas flow-rate and ultimately in GT net power. Moreover, in analogy with the behavior of an MPC, if one wants to avoid such oscillations the setpoint of these controllers should be ramped down (up) during load descent (rise).

According to these observations, an optimized load variation procedure has been defined. More specifically, slightly different rules have been defined for load descent and load rise operations. The rationale considered to define the load descent is outlined below.

- Flow-rate controllers are ramped down in 10 minutes without compromising stability of all unit operations, especially of the GT.
- HP drum pressure controllers are ramped down in 15 minutes to induce as less perturbations as possible to the steam cycle.
- IP and LP drum pressure controllers are operated at fixed setpoint.
- The temperature controller of the inlet stream sent to CO-shift reactor II is ramped down by 10◦C in 5 minutes to avoid saturation of control valves.
- The flue gas temperature controller is operated at fixed setpoint.
- TheSelexolflow-rate is ramped down in 15 minutes.
- Pressure controllers of the two absorption columns are ramped down in 15minutes.

During load rise, the reverse operations are performed. A comparison of the main operating variables during the original load changes and the optimized load changes is reported in Fig.7. From these plots, one can appreciate the increase in stability of the optimized procedures.

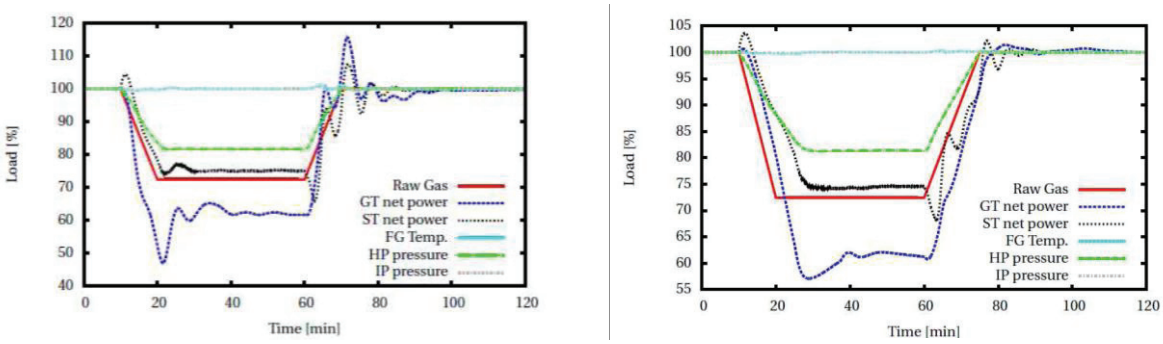

Fig. 7: Main operative variables time behaviour during load changes. Ramp duration 10 minutes (left). Optimized load variation procedure (right)

4. Conclusions

This paper described the simulation of an IGGC with CCS process using an in-house code (ALTERLEGO by ENEL) and the optimization of the control systems using a commercial simulation software (Aspen HYSYS®). A detailed investigation has been carried out in the definition of partial load operations, and a comparison with the partial load off-design studies of the DECARBit report [4] has been addressed. The simulation models at reduced loads have essentially confirmed the operating conditions of [4], with two important differences. First, it is better to operate the flue gas temperature at fixed temperature rather than at different temperature for reduced loads. This practice affects favorably the heat profiles along the HRSG resulting in a easier control in transient behavior. As matter of fact this guideline is the current control strategy in Puertollano IGCC[5].

Second, the IP drums are better operated at fixed pressure, otherwise dynamic instabilities are experienced during load variations. Load variations from 100% GT load to 60% GT load (approximately 72% Gasifier load) and vice versa can be obtained quickly (from 10 to 15 minutes) without compromising safe operation of the overall process.

Critical controllers appear to be those regulating the inlet temperature to the two CO-shift reactors, although multivariable analysis revealed that interactions are generated only during constrained operation (valve fully open or fully closed). The amount of interactions has been reduced by implementing a small (in amount and duration) temperature setpoint ramping of one of the two controllers. Possible further improvements to these controllers can identified as follows:

- Process redesign with the definition of a slightly different topology of heat exchangers and control valves;
- Adoption of a multivariable constrained optimizer (MPC) to coordinate the two temperature controllers (as well as other controllers) and avoid valve saturation.

Other two crucial controllers, which “apparently” did their duty very well, were the pressure controllers of the two absorption columns. However, by keeping the operating pressure of these columns constant they induced variations in the H2-rich Syngas flow-rate which ultimately resulted in undesired oscillation of GT net power. To overcome this problem, the controllers were first detuned and then their setpoints were appropriately ramped during the load variations in a way that the power oscillations were minimized. Overall, the defined optimized procedure appears suitable to achieve the objectives of smooth

and safe operation during load variations, and reveals how the IGGC plant with CCS is resilient to changes in operating conditions.

A final remark can be made about the ongoing research activity, which can be summarized as follows:

- Simulation of GT fuel change during shutdown (switchback from syngas to natural gas) and startup (switchover from natural gas to syngas);
- Decoupling of water/steam between gasifier and combined cycle and between CO shift and combined cycle during shutdown; coupling of water/steam between gasifier and combined cycle and between CO shift and combined cycle during startup;
- Optimization of the overall shutdown and startup procedures;

These issues will be the subject of a future separate publication.

Acknowledgements

The research leading to these results has received funding from the European Community's 7th Framework Programme (FP7/2007-2013) under grant agreement number 211971 (The DECARBit project).

The authors acknowledge the cooperation received by ELCOGAS staff of Puertollano plant (Spain).

References

1. Bardi, A., *D1.1.7 Dynamics and control issues for selected cycles*: DECARBit project report, February 2011.
2. Nord, L. and Bolland, O.., *D1.1.5 Operability analysis of reference cycle*: DECARBit project report, December 2010.
3. Ghelardoni, C., Sviluppo di modelli di simulazione dinamica di processi e tecnologie avanzate di gassificazione: MSc. Thesis in Chemical Engineering, University of Pisa (Italy), 2010.
4. Anantharaman, R., *D1.1.4 Plant operational performance*: DECARBit project report, February 2010.
5 ELCOGAS, *Personal communication*. Puertollano IGCC, January 2011
6. Hannemann, S., *Start-up and shut down procedures of the overall plant.*. s.l. : ELCOGAS, Siemens AG, Krupp Koppers, Air Liquide, 1996. PO-YI-GE-SBE-001 rev1.
7 Bristol, E. H.On a new measure of interaction of multivariable process control., IEEE Trans. Auto. Cont., 1966, Vol. 11, p. 133–134,
8 Mayne, D. Q., et al.*Constrained model predictive control: stability and optimality*. Automatica, 2000, Vol. 36, p. 789-814.
9 Qin, S.J. and Badgwell, T.A. *A survey of industrial model predictive control technology…*, Cont. Engin. Pract., 2003, Vol. 11, p. 733–764.